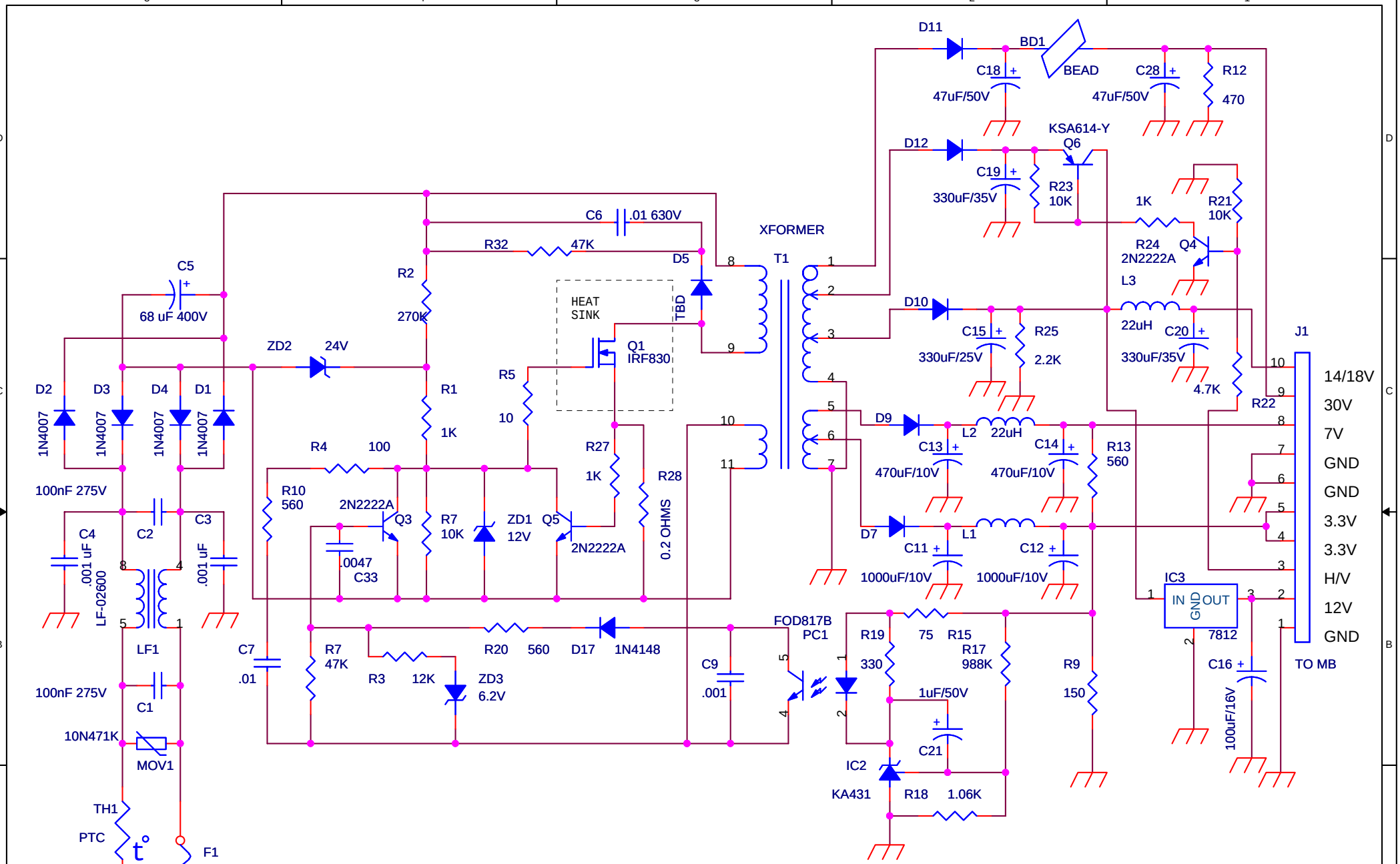

Title	PANSAT 2500A POWER SUPPLY	
Size A	Document Number GRP-GL0242B	Rev 1.0
Date: Wednesday, September 21, 2005	Sheet 1 of 1	